Document ID: 0007B9(4.00)

Section drawing - NTech Villa Tophinged

Date: 28 August 2023 | **Material:** Timber | **Frame:** 105 | **Glass:** Triple glazed

Markets

Applicable for product codes: TM, TO, TW

NorDan

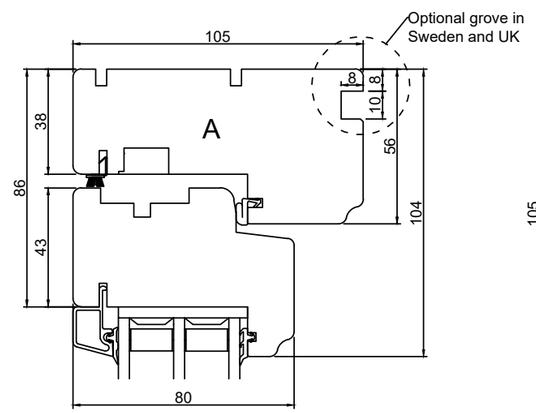

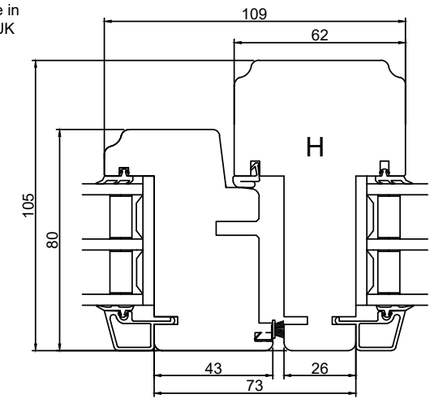

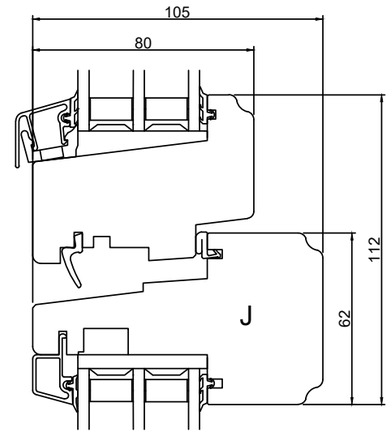

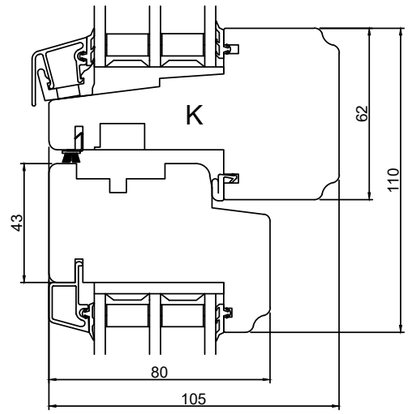

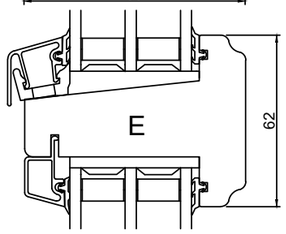

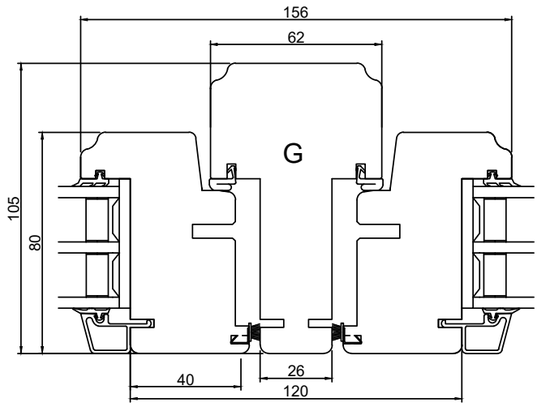

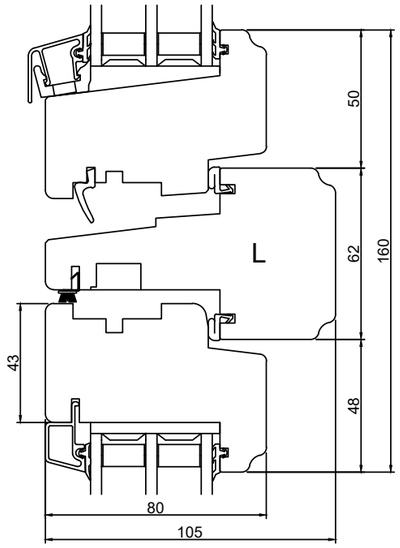

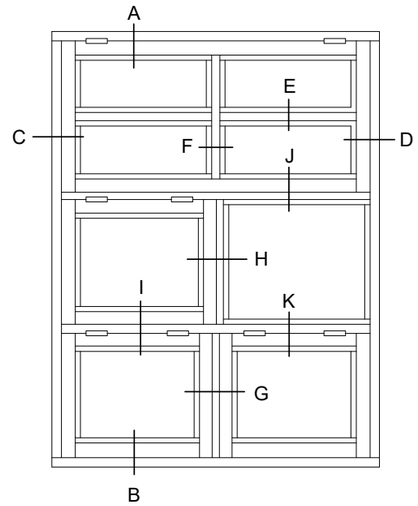

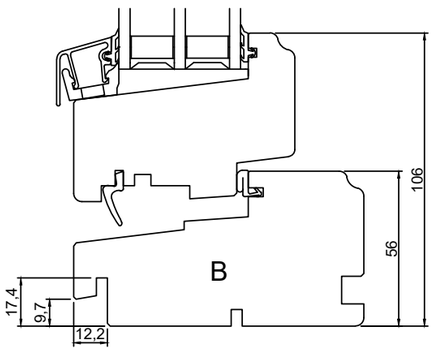

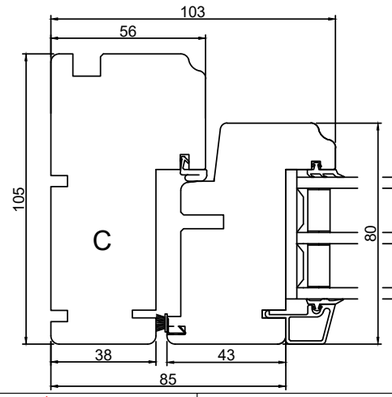

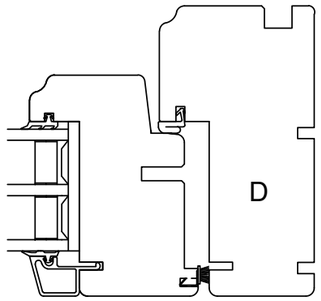

Constr. by:	Rev. by:	Appr by:	Tolerance:
RB	TM	AOS	General Tolerance ±0.2
Constr. Date: 28.06.18	Rev. date: 28.04.2023	Appr. date: 09.05.2023	Product series: NTech

Norwegian: ND NTech Villa Topphengslet
105/80, 105 mm karm

Swedish: ND NTech Villa Topphängd
105/80, 105 mm karm

English: ND NTech Villa Tophinged
105/80, 105 mm frame

NorDan
www.nordan.no - www.nordan.se - www.nordan.co.uk

Format:	Scale:	Side:
A3	1:2	1 of 1

Drawing no: N460914

Revision: C

Old drwg no.(Rev):

This drawing is NorDan AS property and may not without our permission be copied, transferred to another party or otherwise improperly used. Violation penalized under applicable law.